Product Specification

XFP WDM 10G ER 40km TX1330

10Gb/s BIDI XFP Transceiver

1. Product Features

- Hot-pluggable XFP footprint
- Up to 10.7Gbps Data Links
- XFI Loopback Mode
- RoHS-6 Compliant (lead-free)
- Power dissipation<1.5W
- Case operating temperature:-5 °C~70°C
- Single + 3.3 V Power Supply and LVTTL Logic
- Single Mode LC Receptacle Bi-directional Transceiver
- Up to 40km transmission on SMF
- 1330nm DFB laser and PIN receiver
- 2-wire interface with integrated Digital Diagnostic monitoring
- EEPROM with Serial ID Functionality
- Compliant with FC_PI_4 REV 7.0
- Compliant with XFP MSA with duplex LC connector

2. Applications

- 10GBASE-BX 10.3125Gb/s Ethernet
- 10GBASE-BX 9.953Gb/s Ethernet
- SONET OC-192 SR-1 SDH STM I-64.1

3. Description

XFP WDM 10G ER 40km TX1330 is hot pluggable 3.3 V Small-Form-Factor transceiver module. It designed expressly for high-speed communication applications that require rates up to 10.7Gb/s, it designed to be compliant with XFP MSA. The module data link up to 40km in 9/125um single mode fiber. The optical output can be disabled by a LVTTL logic high-level input of Tx Disable.Tx Fault is provided to indicate that degradation of the laser. Loss of signal

(LOS) output is provided to indicate the loss of an input optical signal of receiver or the link status with partner.

4. Absolute Maximum Ratings

Parameter	Symbol	Min.	Max.	Unit
Storage Temperature	Ts	-40	85	°C
Storage Ambient Humidity	HA	5	95	%
Operating Relative Humidity	RH	-	85	%
Power Supply Voltage	V_{CC}	-0.3	4	V
Signal Input Voltage	V_{CC}	Vcc-0.3	Vcc+0.3	V

5. Recommended Operating Conditions

Parameter	Symbol	Min.	Typical	Max.	Unit
Case Operating Temperature	Tcase	-5		70	°C [2]
Power Supply Voltage	V_{CC}	3.14	3.3	3.47	V
Power Supply Current	I_{CC}	-	-	450	mA
Data Rate	BR		10.3125		Gbps
Transmission Distance	T_D	2	-	20	km [1]
Coupled fiber			Single mode fiber [3]		

Notes:
[1] Measured with SMF
[2] Without air flow
[3] ITU-T G.652

6. Specification of Transmitter

Parameter	Symbol	Min.	Typical	Max.	Unit
Average Launched Power	PO	0		4	dBm
Average Launched Power(Laser Off)	POUT-OFF	-	-	-30	dBm [1]
Optical Modulation Amplitude	OMA	-3	-	-	dBm [1]
Centre Wavelength Range	λC	1320	1330	1340	nm
Side mode suppression ratio	SMSR	30	-	-	dB
Spectrum Bandwidth(-20dB)	σ	-	-	1	nm
Extinction Ratio	ER	3.5	6	-	dB [2]
Output Eye Mask			Compliant with FC_PI_4 REV 7.0 [2]		

Notes:
[1] The optical power is launched into SMF
[2] Measured with RPBS 2^{31}-1 test pattern @10.3125Gbs

7. Specification of Receiver

Parameter	Symbol	Min.	Typical	Max.	Unit
Input Optical Wavelength	λIN	1260	1270	1280	nm
Receiver Sensitivity in average	PIN	-	-	-15	dBm [1]
Input Saturation Power (Overload)	PSAT	0.5	-	-	dBm [1]
LOS -Assert Power	PA	-30	-	-	dBm
LOS -Deassert Power	PD	-	-	-18	dBm
LOS -Hysteresis	PHys	0.5	-	4	dB

Notes:
[1] Measured with RPBS 2^{31}-1 test pattern @10.3125Gbs BER=<10^{-12} ER=6dB

8. Electrical Interface Characteristics

Parameter	Symbol	Min.	Typical	Max.	Unit
Total power supply current	Icc	-	-	350	mA
Transmitter					
Differential Data Input Voltage	VDT	120	-	820	mVp-p
Differential line input Impedance	RIN	85	100	115	Ohm
Transmitter Fault Output-High	VFaultH	2.4	-	Vcc	V
Transmitter Fault Output-Low	VFaultL	-0.3	-	0.8	V
Transmitter Disable Voltage- High	VDisH	2	-	Vcc+0.3	V
Transmitter Disable Voltage- low	VDisL	-0.3	-	0.8	V
Receiver					
Differential Data Output Voltage	VDR	300	-	850	mVp-p
Differential line Output Impedance	ROUT	80	100	120	Ohm
Receiver LOS Pull up Resistor	RLOS	4.7	-	10	KOhm
Data Output Rise/Fall time	tr/tf	20	-	-	ps
LOS Output Voltage-High	VLOSH	2	-	Vcc	V
LOS Output Voltage-Low	VLOSL	-0.3	-	0.4	V

9. Pin Descriptions

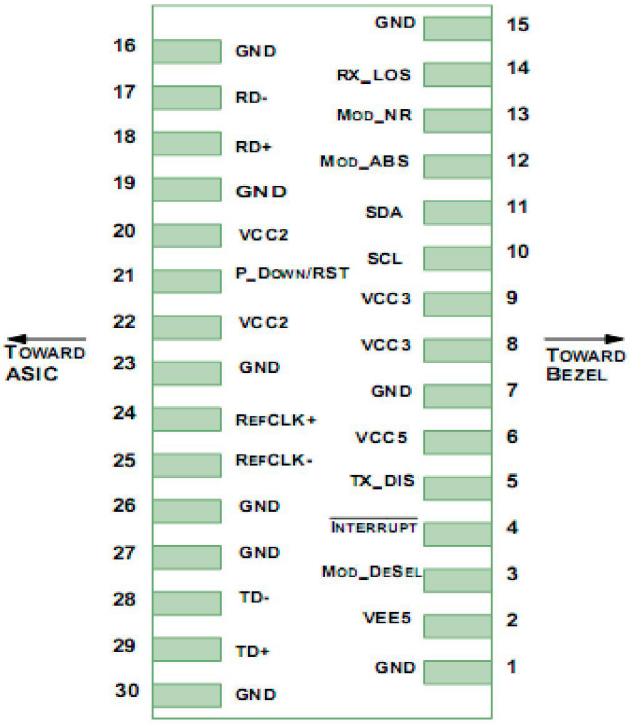

Diagram of Host Board Connector Block Pin Numbers and Name

Pin	Logic	Symbol	Name/Description
1		GND	Module Ground [1]
2		VEE5	Optional -5.2 Power Supply **- Not required**
3	LVTTL-I	Mod-Desel	Module De-select; When held low allows the module to respond to 2-wire serial interface commands
4	LVTTL-O	Interrupt	Interrupt (bar); Indicates presence of an important condition which can be read over the serial 2-wire interface [2]
5	LVTTL-I	TX_DIS	Transmitter Disable; Transmitter laser source turned off
6		VCC5	+5 Power Supply
7		GND	Module Ground [1]
8		VCC3	+3.3V Power Supply
9		VCC3	+3.3V Power Supply
10	LVTTL-I	SCL	Serial 2-wire interface clock [2]
11	LVTTLI/O	SDA	Serial 2-wire interface data line [2]
12	LVTTL-O	Mod_Abs	Module Absent; Indicates module is not present. Grounded in the module. [2]

Pin	Logic	Symbol	Name/Description
13	LVTTL-O	Mod_NR	Module Not Ready; XGIGA defines it as a logical OR between RX LOS and Loss of Lock in TX/RX. [2]
14	LVTTL-O	RX_LOS	Receiver Loss of Signal indicator
15		GND	Module Ground [1]
16		GND	Module Ground [1]
17	CML-O	RD-	Receiver inverted data output
18		TD+	Transmitter Non-Inverted DATA in. AC Coupled.
19		TD-	Transmitter Inverted DATA in. AC Coupled.
20		VEET	Transmitter Ground (Common with Recei ver Ground) [1]
18	CML-O	RD+	Receiver non-inverted data output
19		GND	Module Ground [1]
20		VCC2	+1.8V Power Supply **- Not required**
21	LVTTL-I	P Down/RST	Power Down; When high, places the module in the low power stand-by mode and on the falling edge of P_Down initiates a module reset Reset; The falling edge initiates a complete reset of the module including the 2-wire serial interface, equivalent to a power cycle.
22		VCC2	+1.8V Power Supply **- Not required**
23		GND	Module Ground [1]
24	PECL-I	RefCLK+	Reference Clock non-inverted input, AC coupled on the host board **- Not required** [3]
25	PECL-I	RefCLK-	Reference Clock inverted input, AC coupled on the host board **- Not required** [3]
26		GND	Module Ground [1]
27		GND	Module Ground [1]
28	CML-I	TD-	Transmitter inverted data input
29	CML-I	TD+	Transmitter non-inverted data input
30		GND	Module Ground [1]

Notes:
[1] Module circuit ground is isolated from module chassis ground within the module.
[2] Open collector; should be pulled up with 4.7k - 10kohms on host board to a voltage between 3.15V and 3.6V.
[3] A Reference Clock input is not required by the XFBL-273396-40D. If present, it will be ignored.

10. Recommended Block Circuit

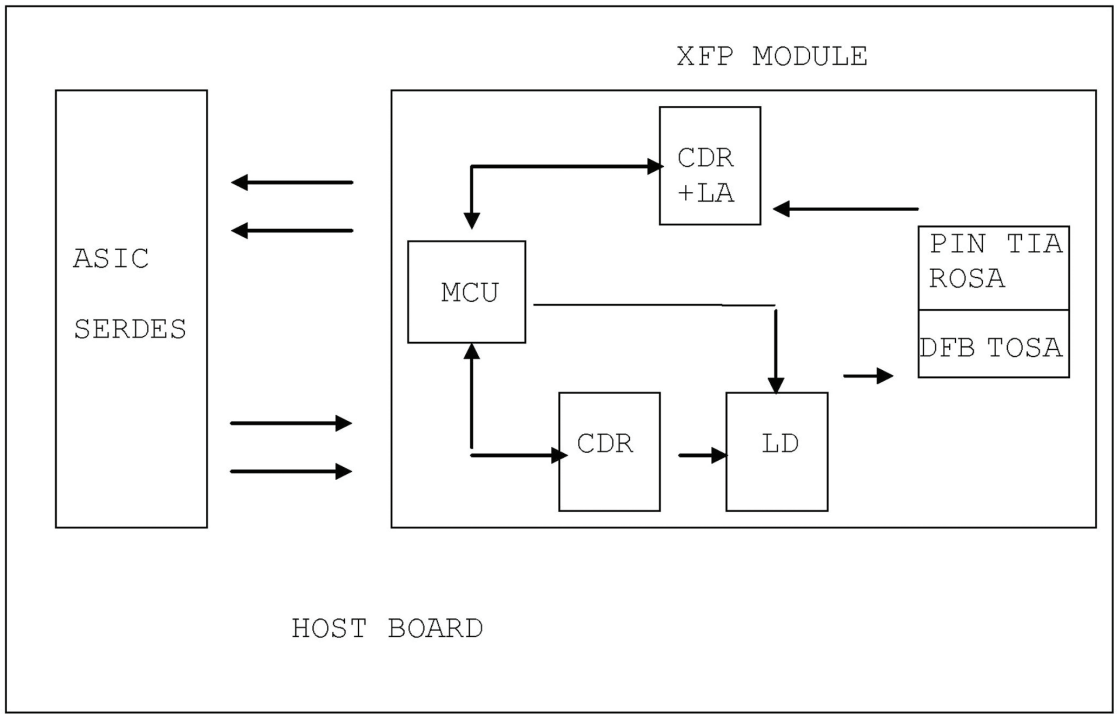

11. Outline Dimensions

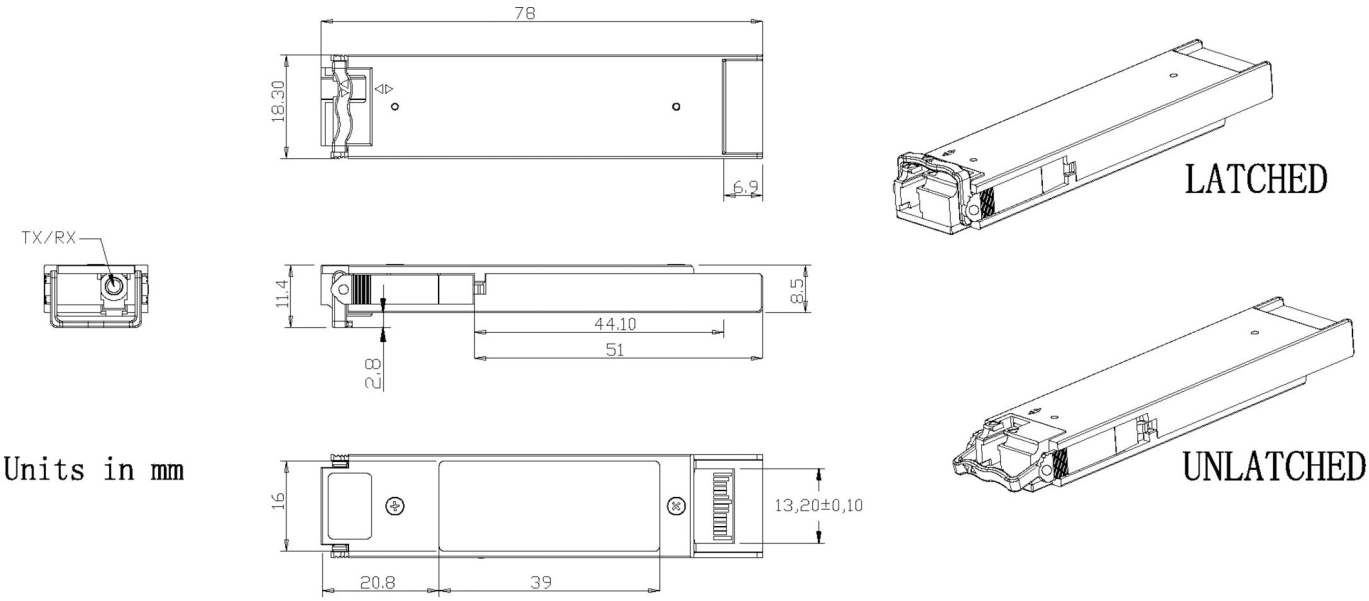

Units in mm

12. Regulatory Compliance

Feature	Reference	Performance
Electrostatic discharge (ESD)	IEC/EN 61000-4-2	Compatible with standards
Electromagnetic Interference (EMI)	FCC Part 15 Class B EN 55022 Class B (CISPR 22A)	Compatible with standards
Laser Eye Safety	FDA 21CFR 1040.10, 1040.11 IEC/EN 60825-1, 2	Class 1 laser product
Component Recognition	IEC/EN 60950 , UL	Compatible with standards
ROHS	2002/95/EC	Compatible with standards
EMC	EN61000-3	Compatible with standards